Toyota Highlander Hybrid - Hybrid Synergy Drive System Operation

The Hybrid Synergy Drive for the Highlander Hybrid generates a motive force in combination with the engine, MG1, MG2 and MGR (4WD-i only) in accordance with driving conditions. Representative examples of the various combinations are described below.

Operational Status – 4WD-i Models

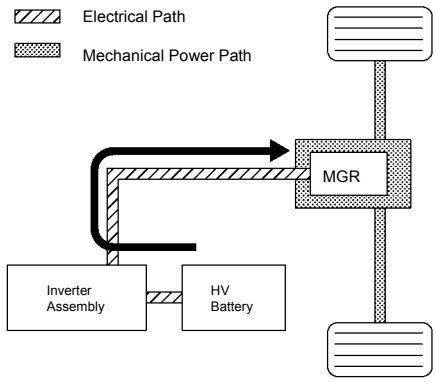

The rear motor during acceleration from start and at low to mid-range speeds

To ensure the proper driving force of the vehicle during start-off or acceleration the electrical power of the HV battery is supplied to MGR in order to drive the rear wheels. (Supply of electrical power from the HV battery to MG2 also provides force to drive the front wheels.)

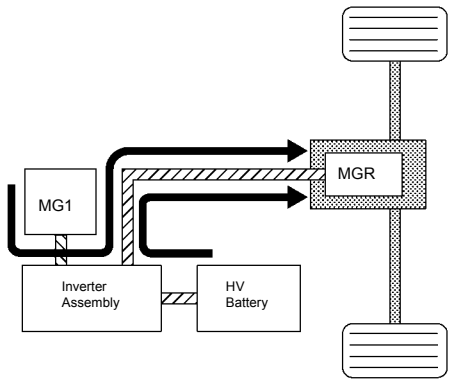

The rear motor during sudden acceleration

During full throttle acceleration of the vehicle, both the electrical power of the HV battery and the electrical power generated by MG1 are supplied to MGR in order to drive the rear wheels. (At the same time, the front wheels are being driven by the engine via planetary gears, MG1 is driven by the engine via the planetary gears, in order to supply the generated electricity to MG2.)

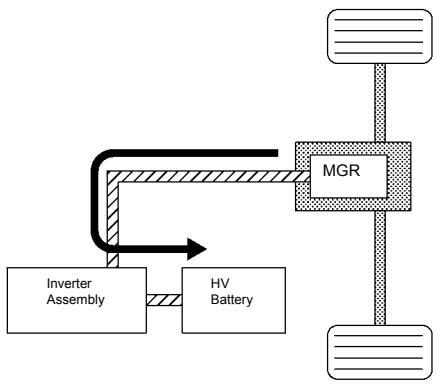

The rear motor during braking and other forms of deceleration

When the vehicle is decelerating, kinetic energy from the rear wheels is recovered and converted into the electrical energy and used to recharge the HV battery by means of MGR. (Also while the vehicle is decelerating, kinetic energy from the front wheels is recovered and converted into electrical energy and used to recharge the HV battery by means of MG2.)